VELUX®

EDW-S

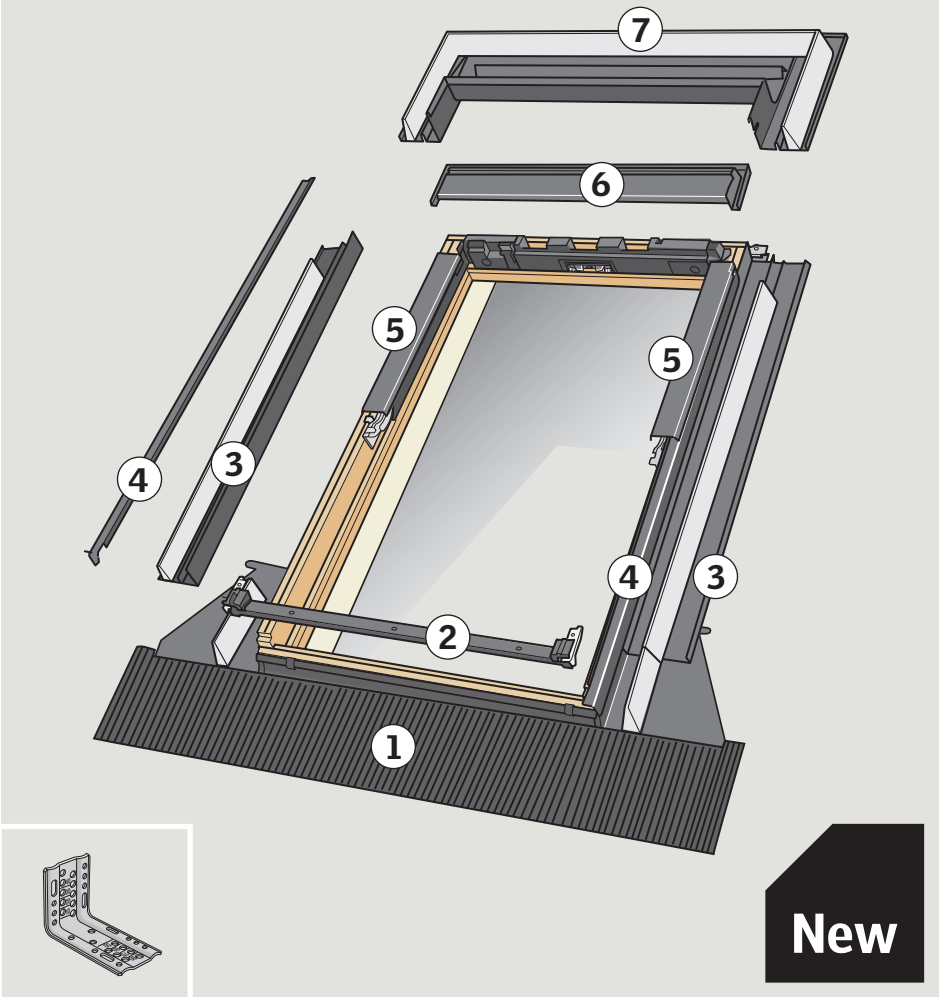

15°-90°

max 120 mm

VAS 453495-2014-01

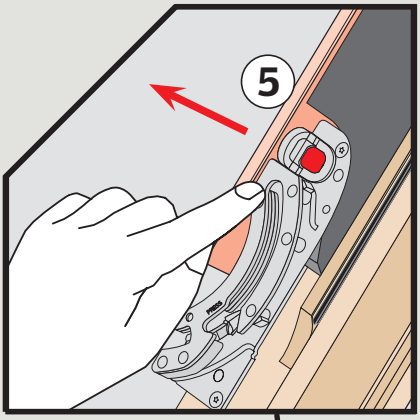

Page 20

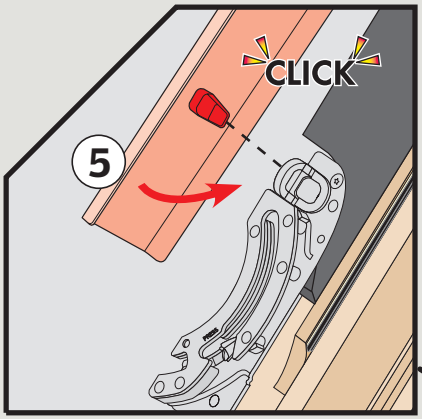

Page 20

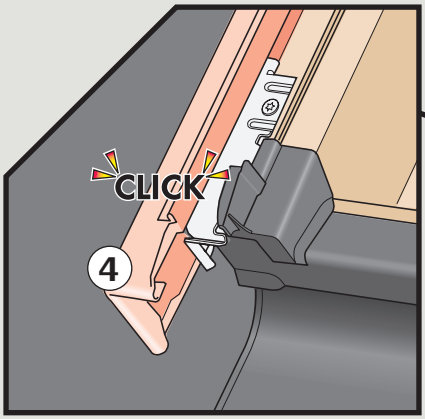

Page 21

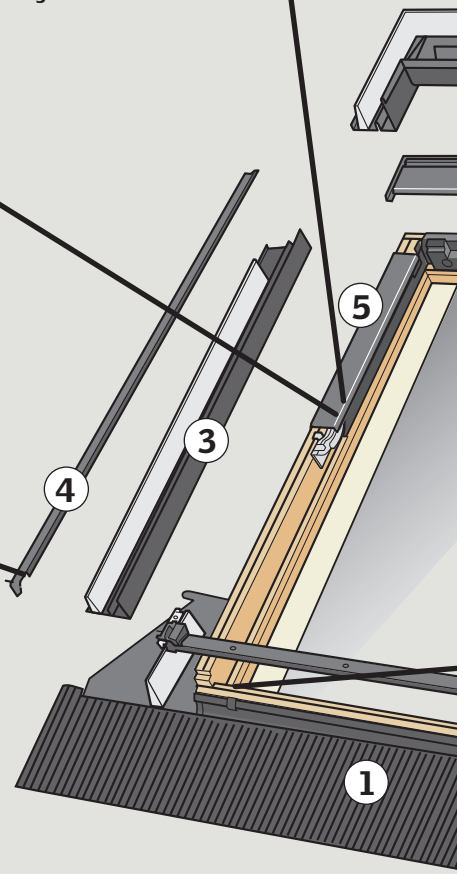

New

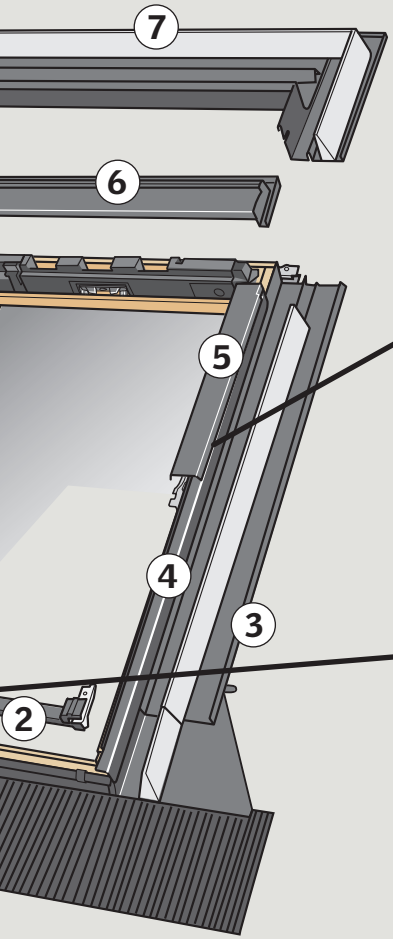

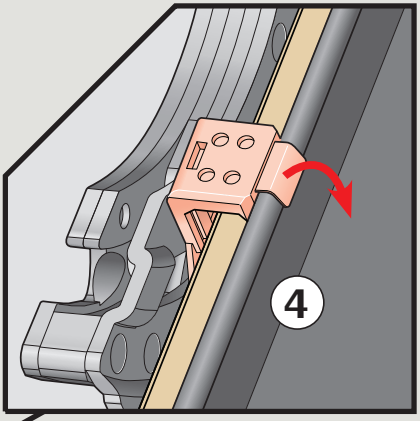

Page 21

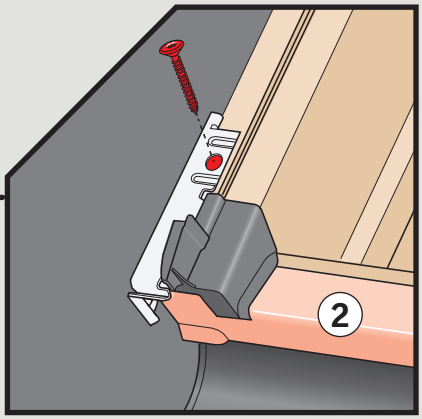

Page 19

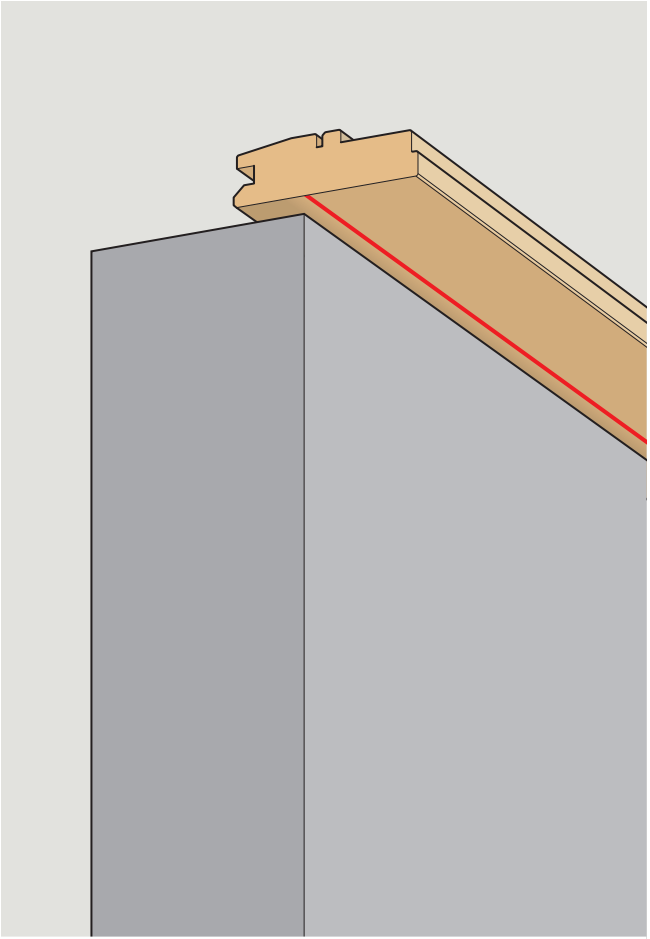

Pages 10-12 + 13-23

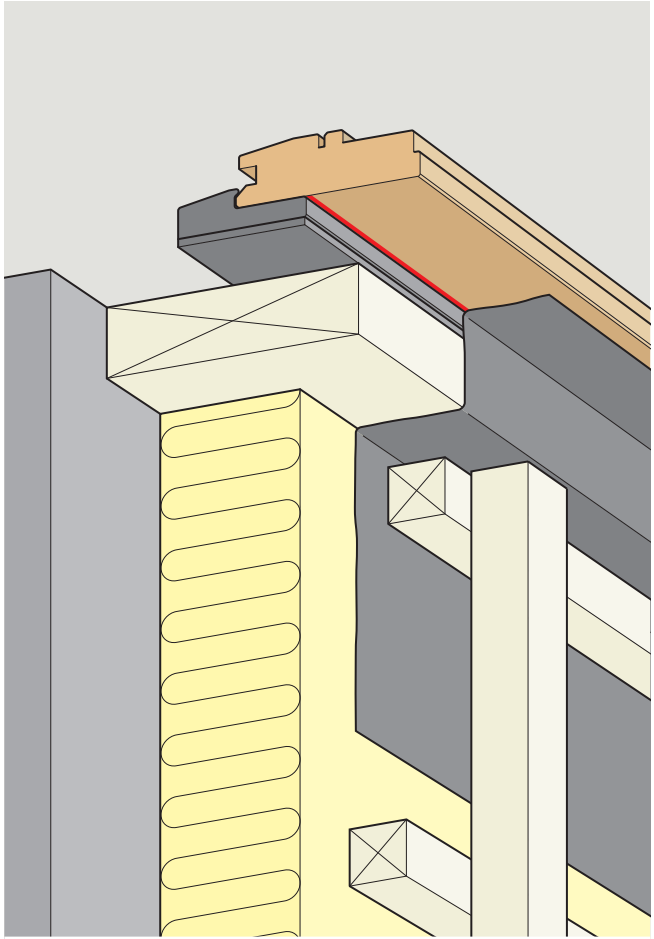

Pages 6-9 + 13-23

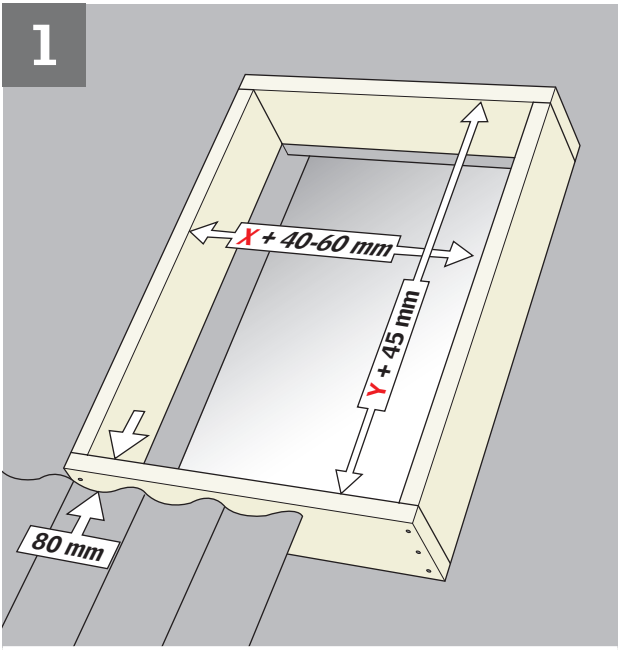
1
X + 40-60 mm
Y + 45 mm
80 mm

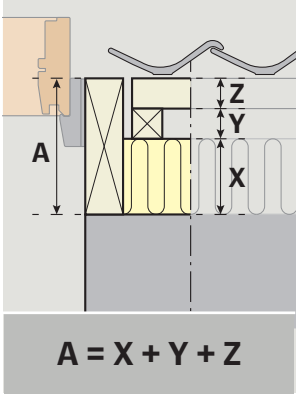
Z
Y
A
X
A = X + Y + Z

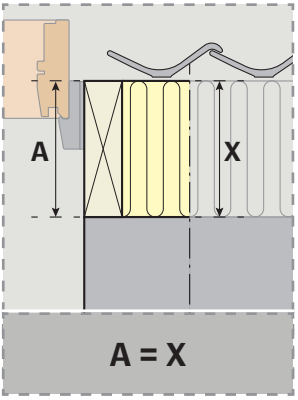
A
X
A = X

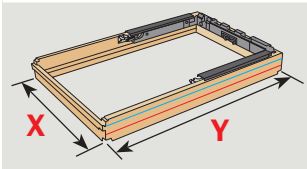
X
Y

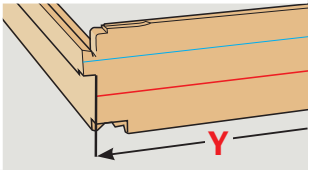
Y

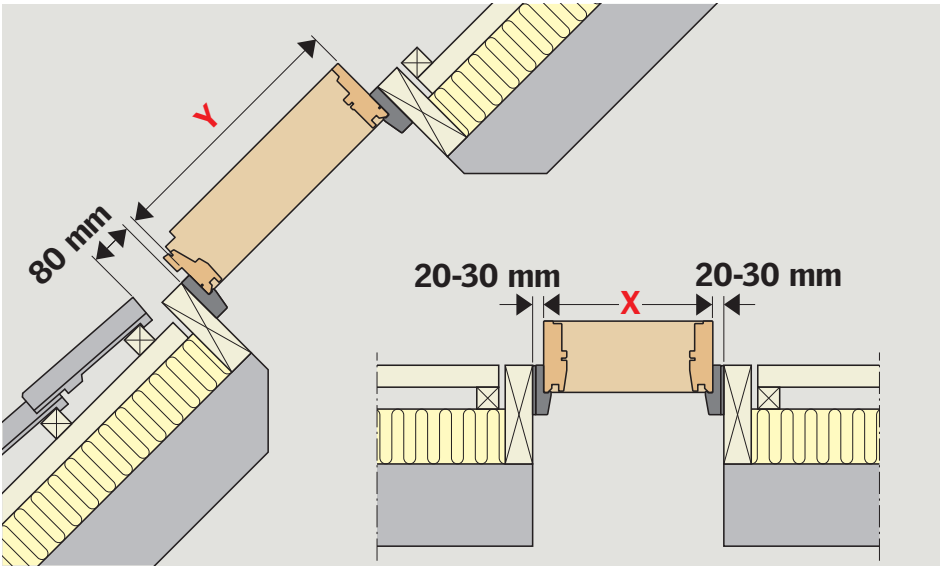
Y
80 mm
20-30 mm
X
20-30 mm

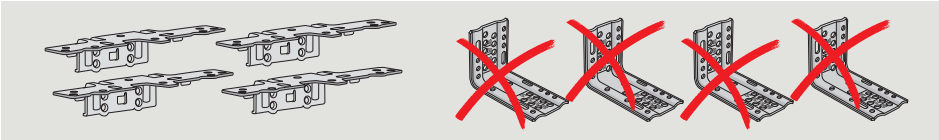

2

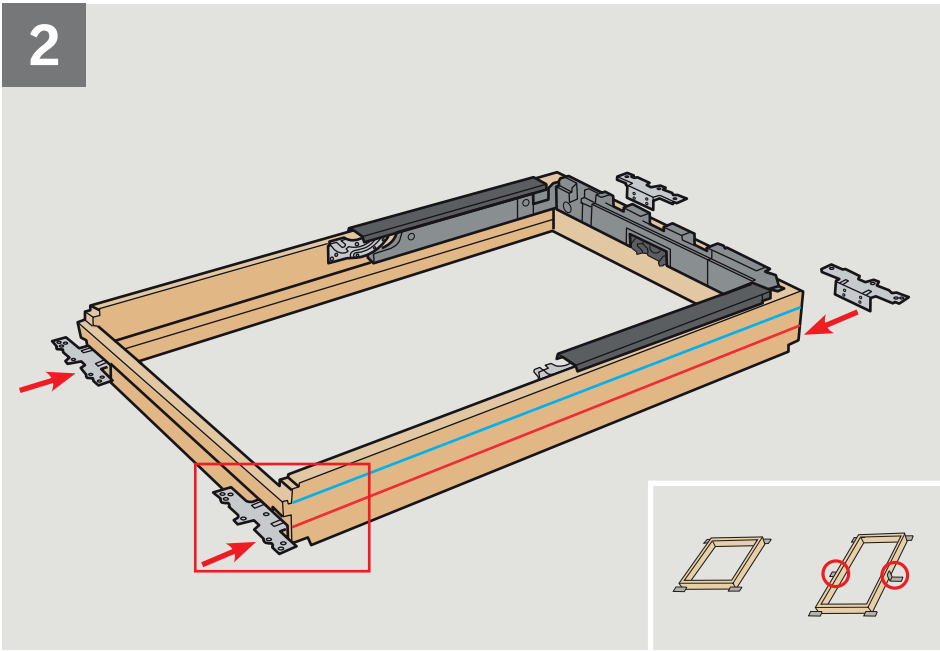

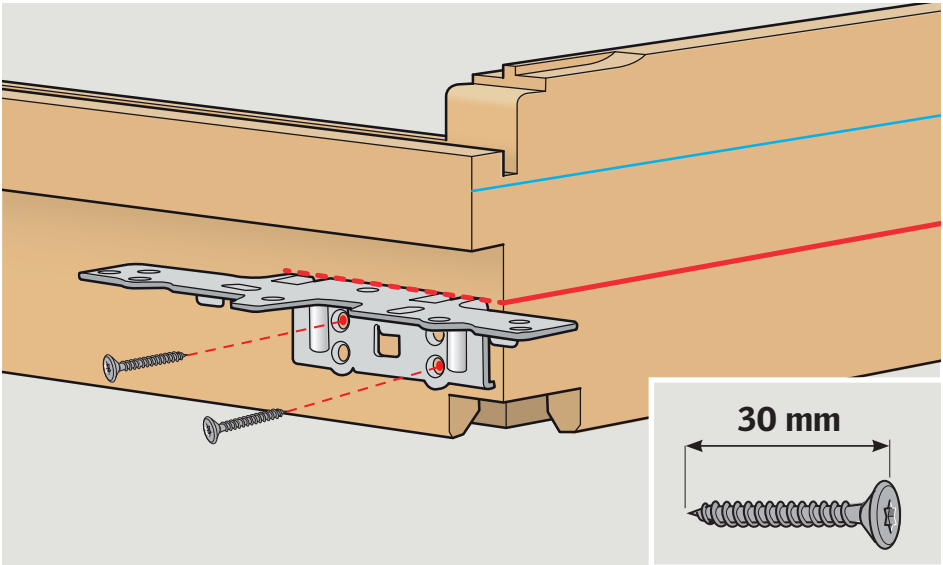

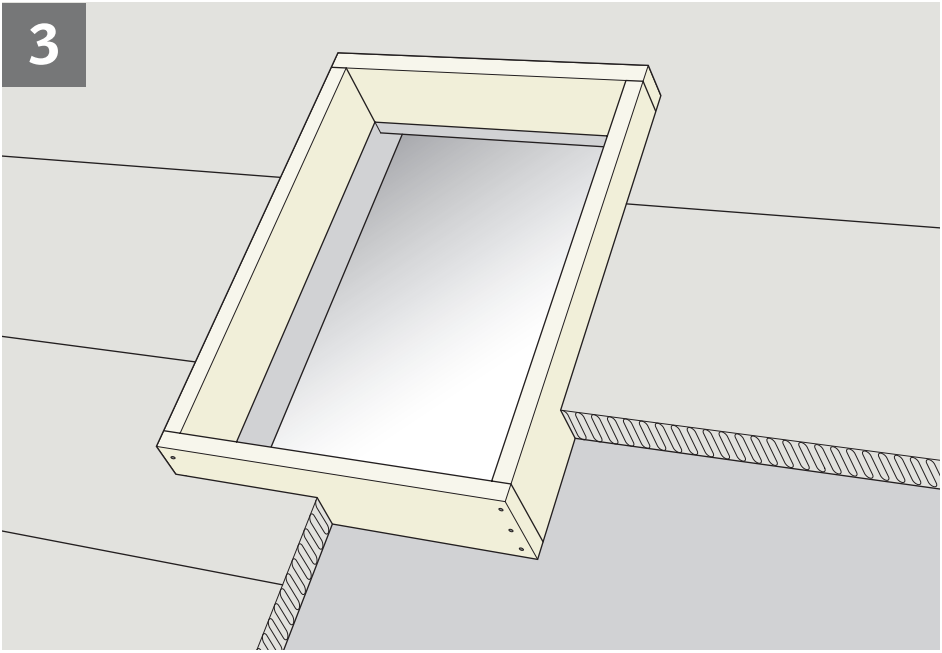
3

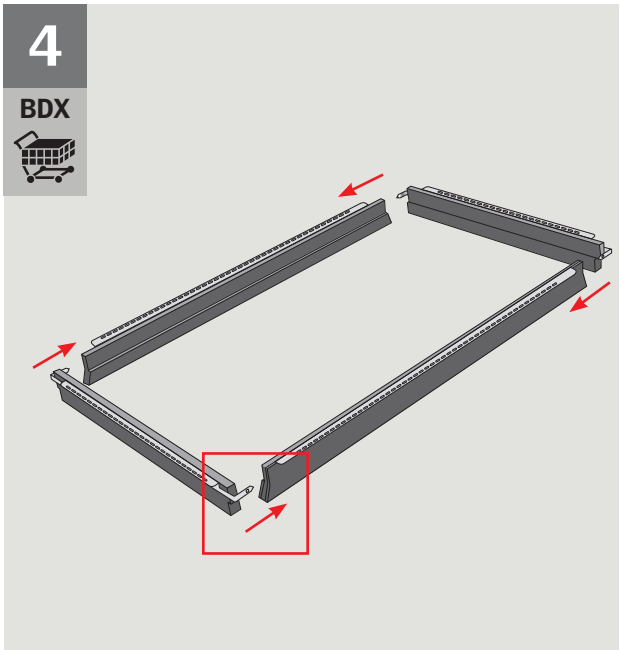
4
BDX

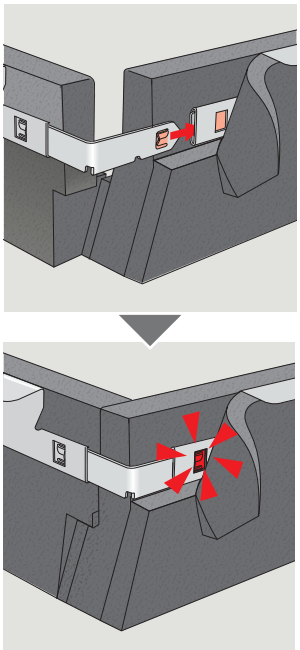

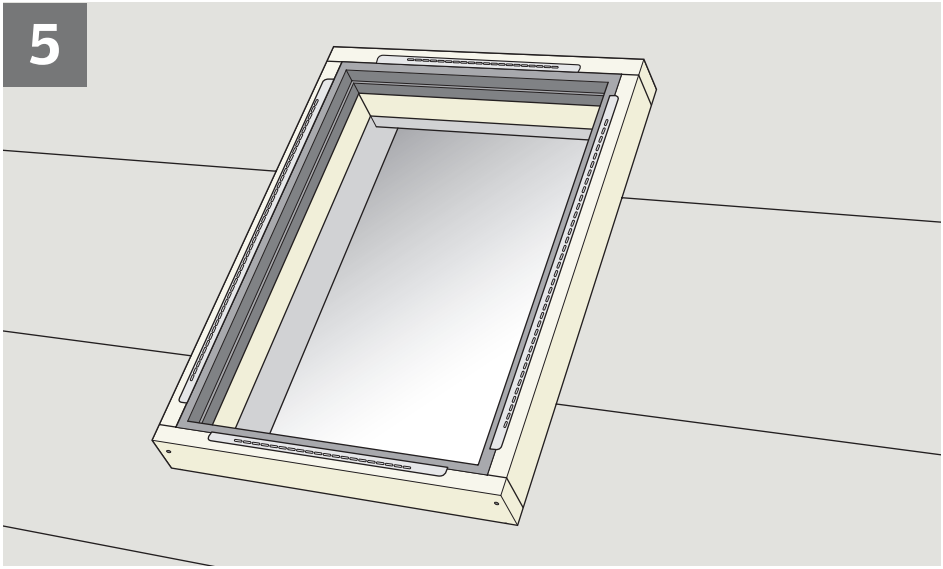
5

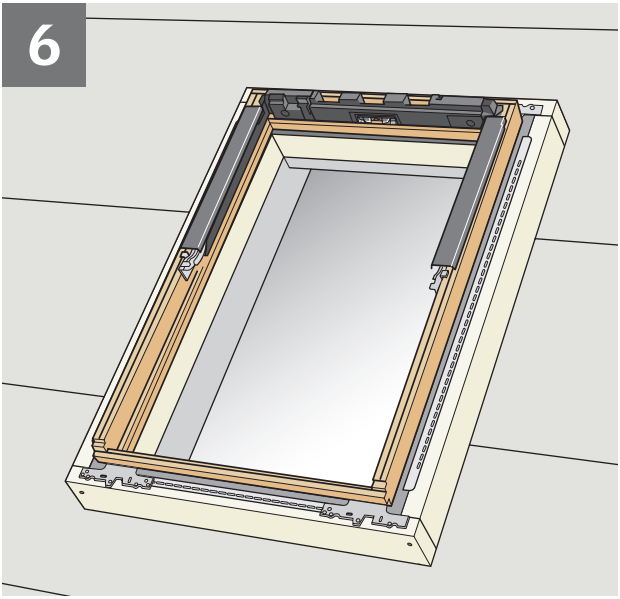
6

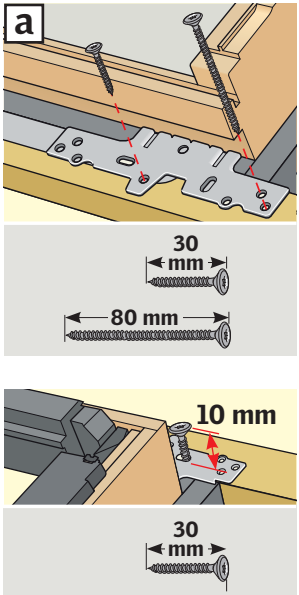
a
30 mm
80 mm
10 mm
30 mm

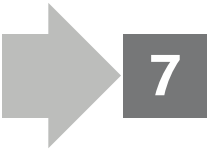
7

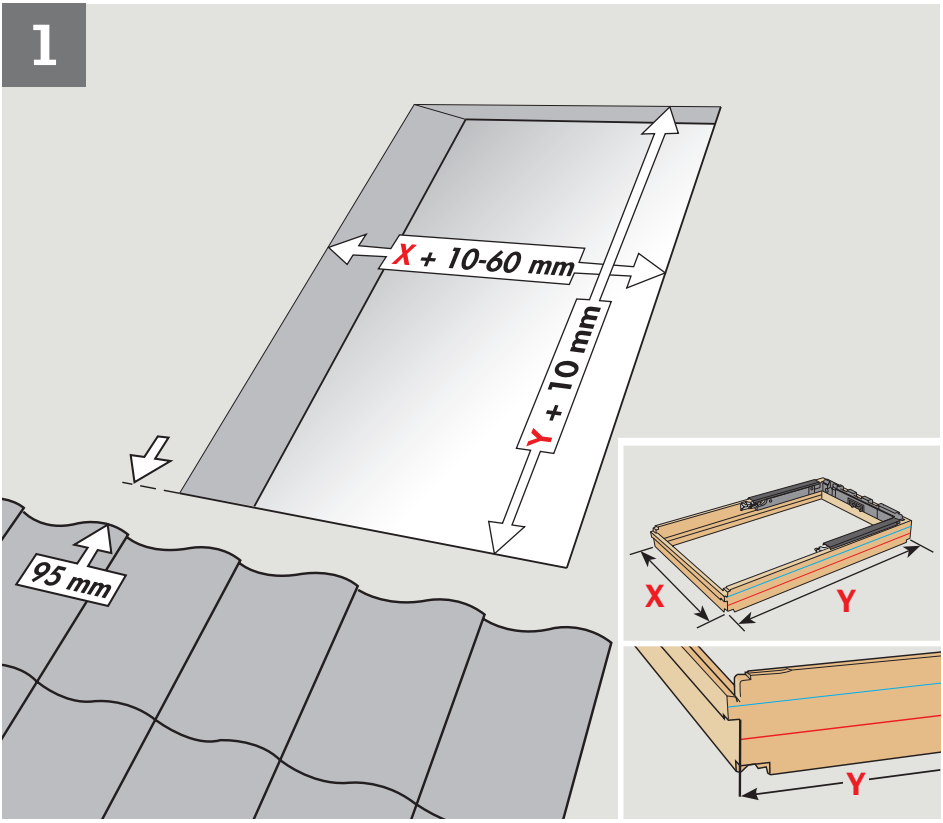
1
X + 10-60 mm
Y + 10 mm
95 mm
X
Y
Y

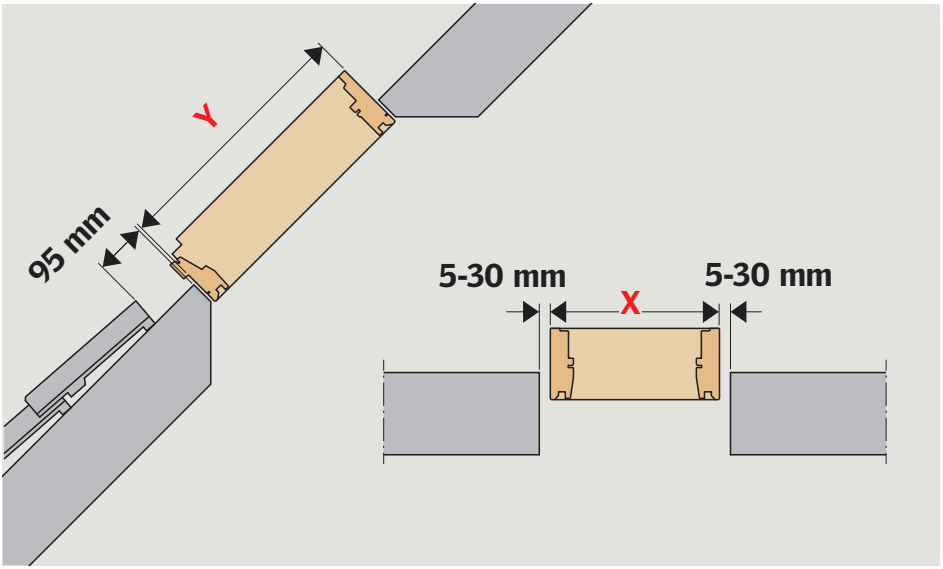
Y
95 mm
5-30 mm
X
5-30 mm

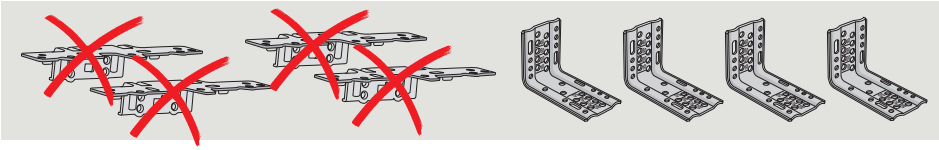

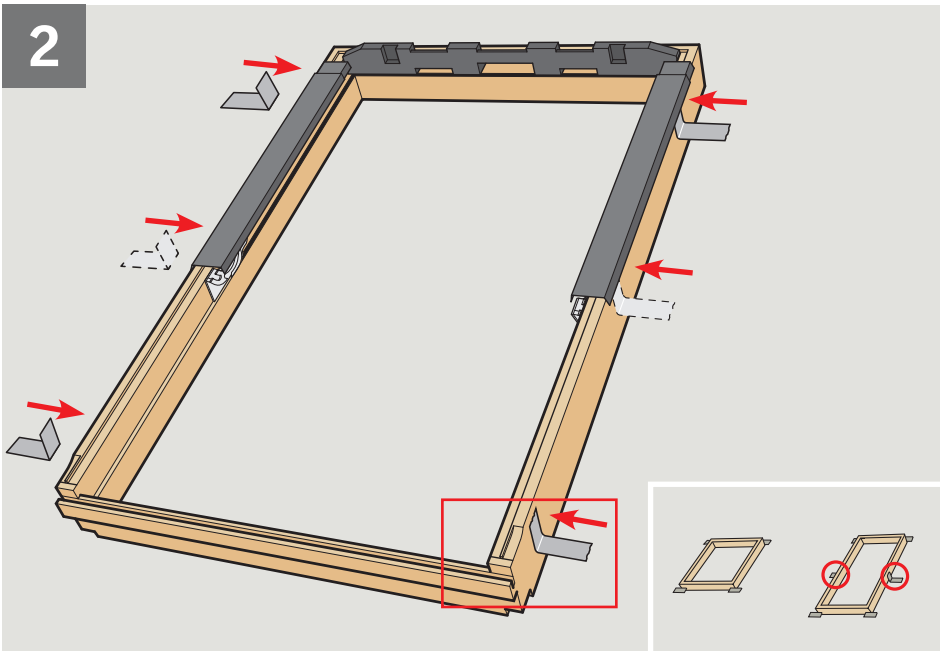
2

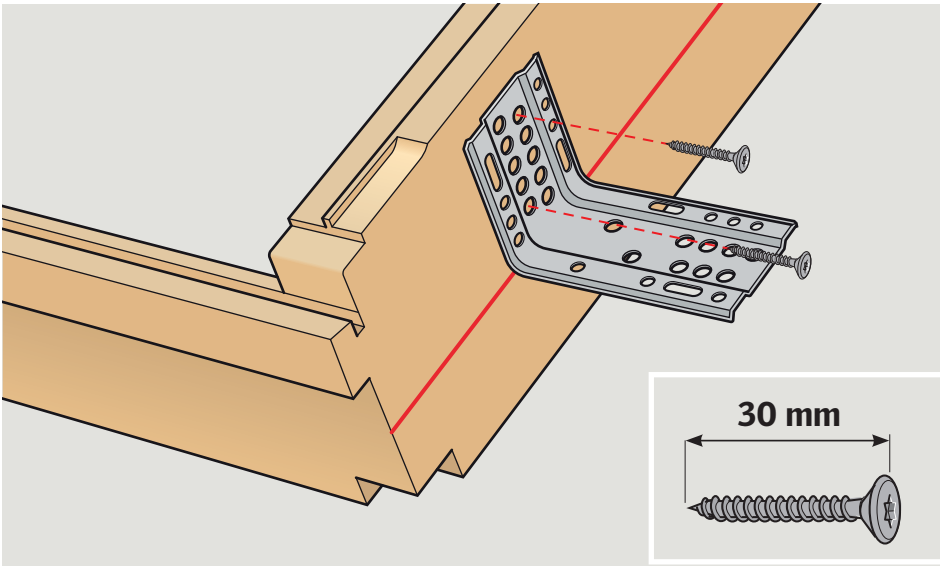
30 mm

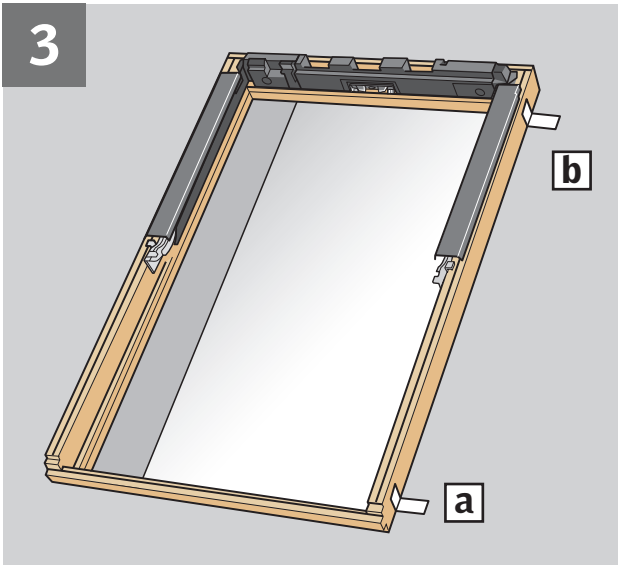
3
b
a

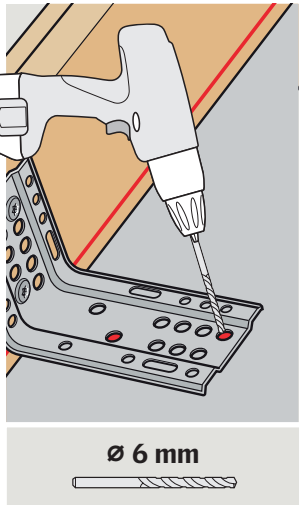
ø 6 mm

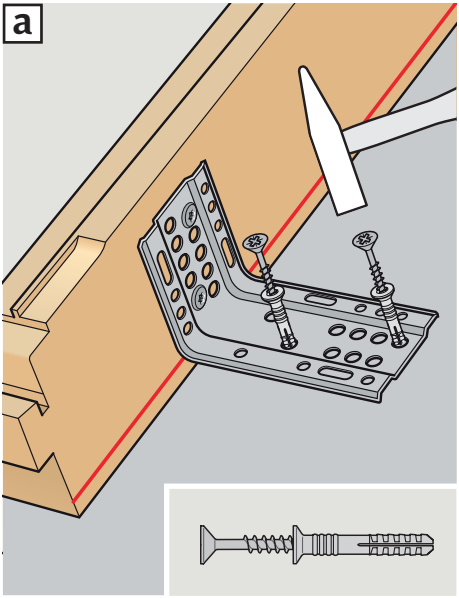
a

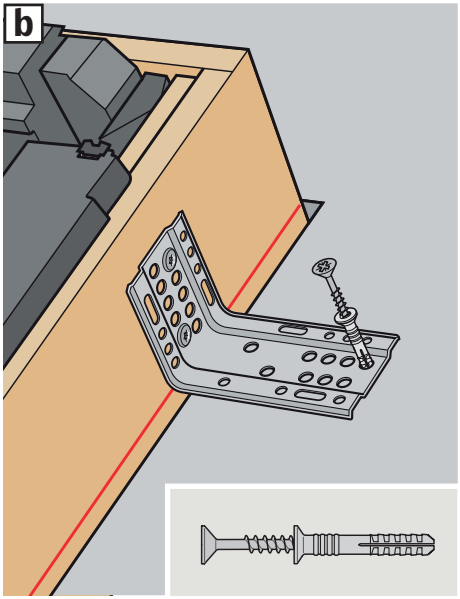
b

7

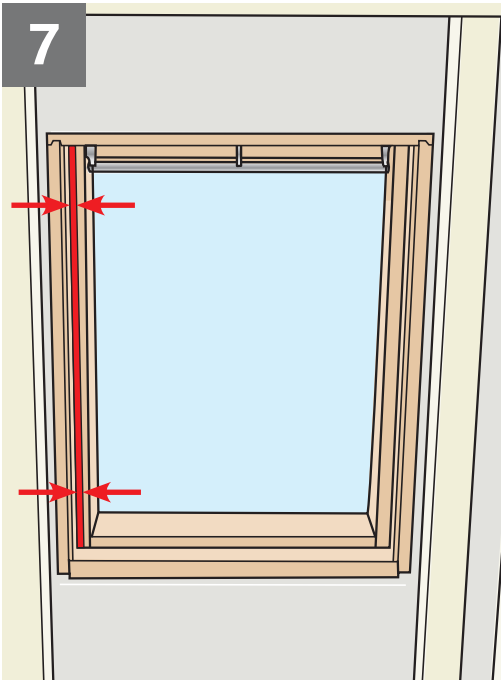
7

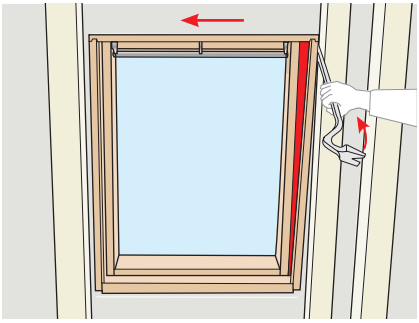

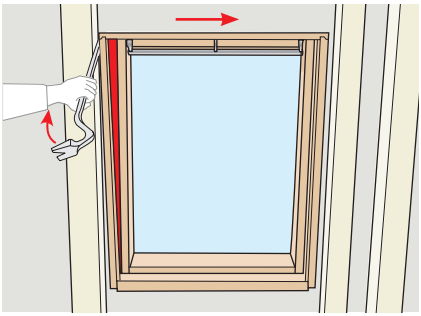

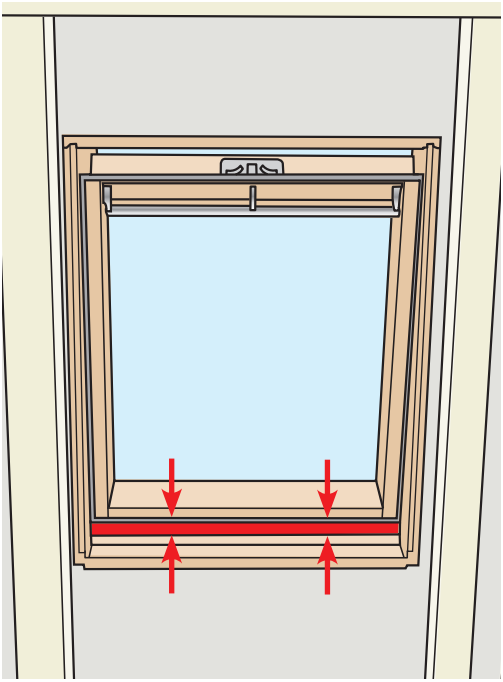

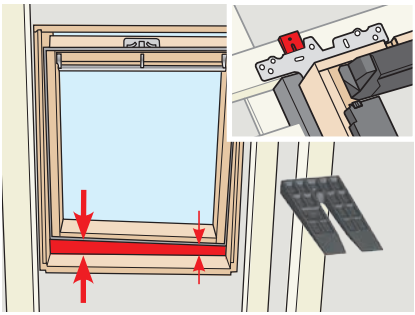

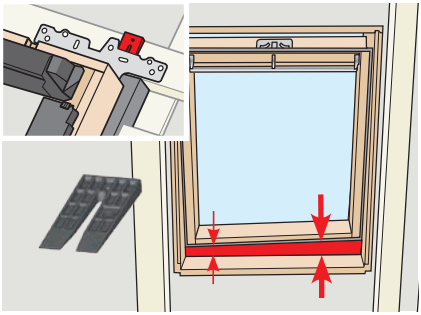

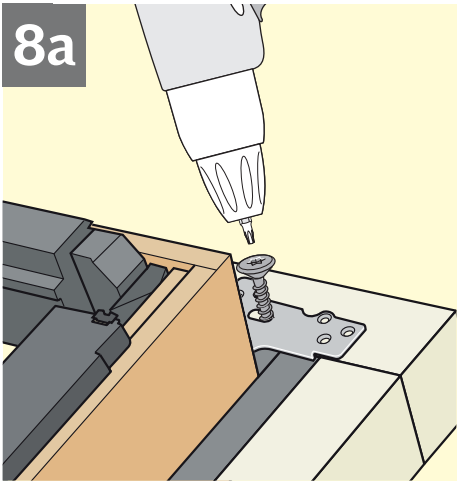
8a

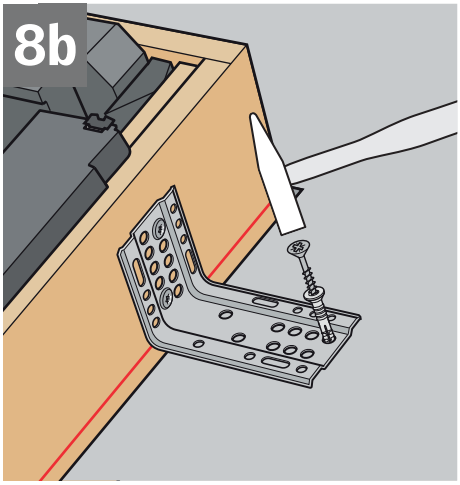
8b

9
BFX
1000U
VELUX
BFX 1000U

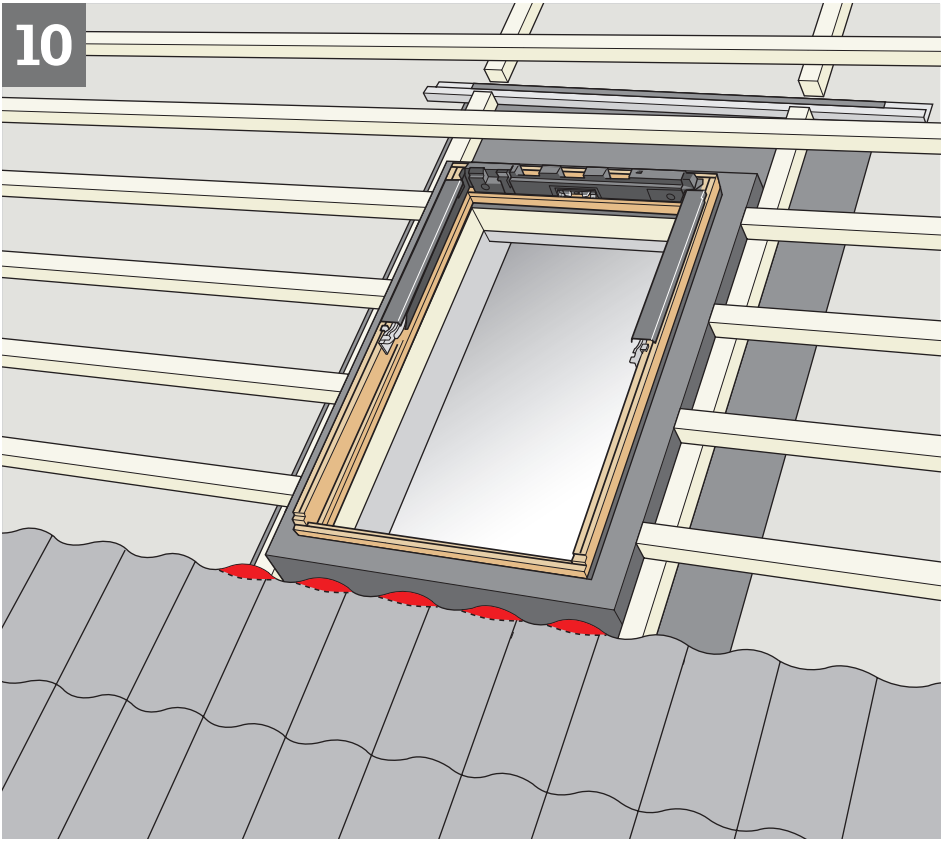
10

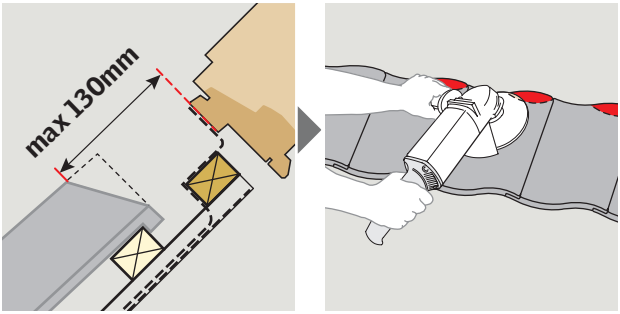
max 130mm

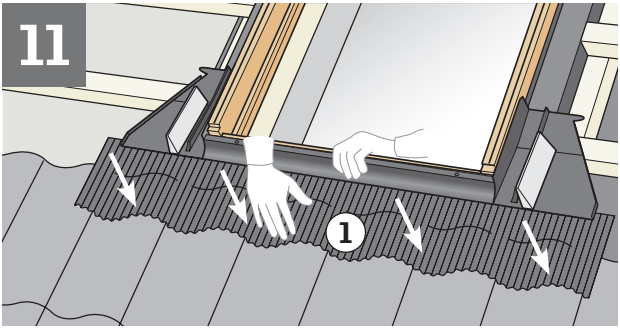

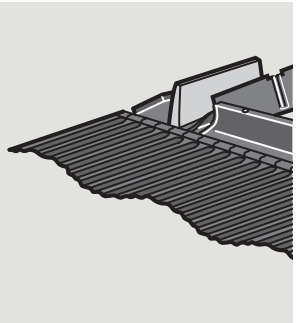

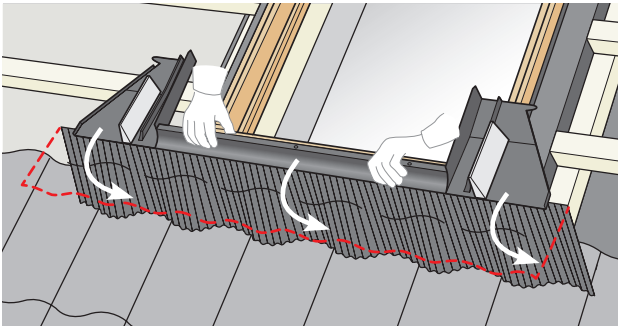

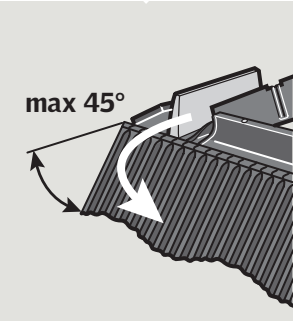

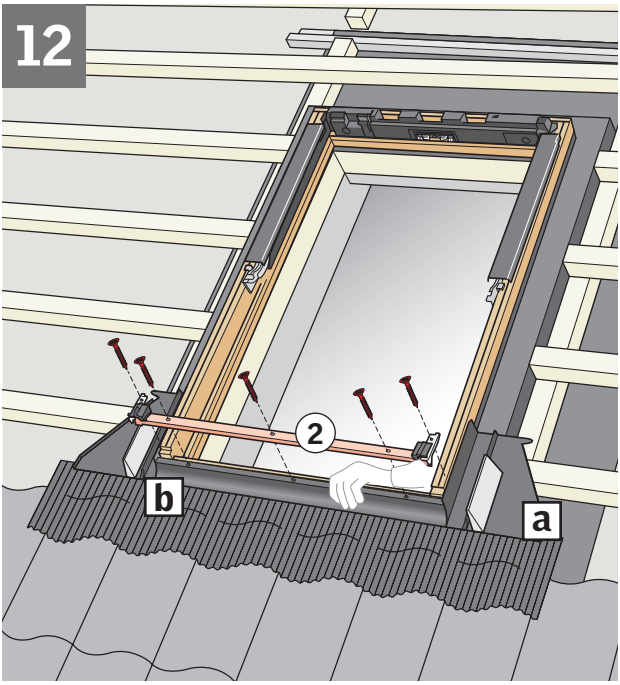

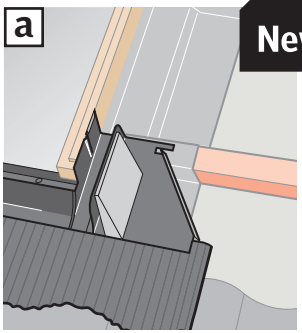

New

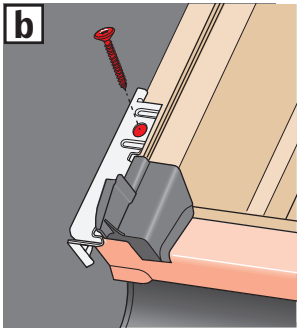

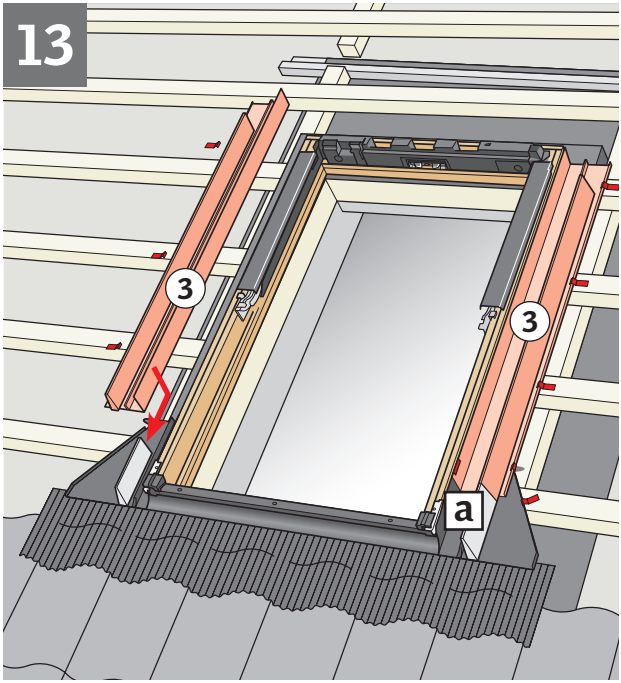
13
3
3
a

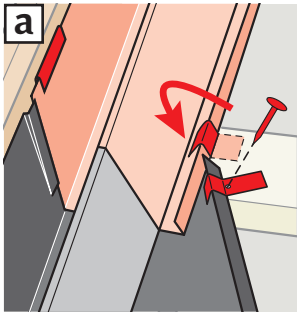
a

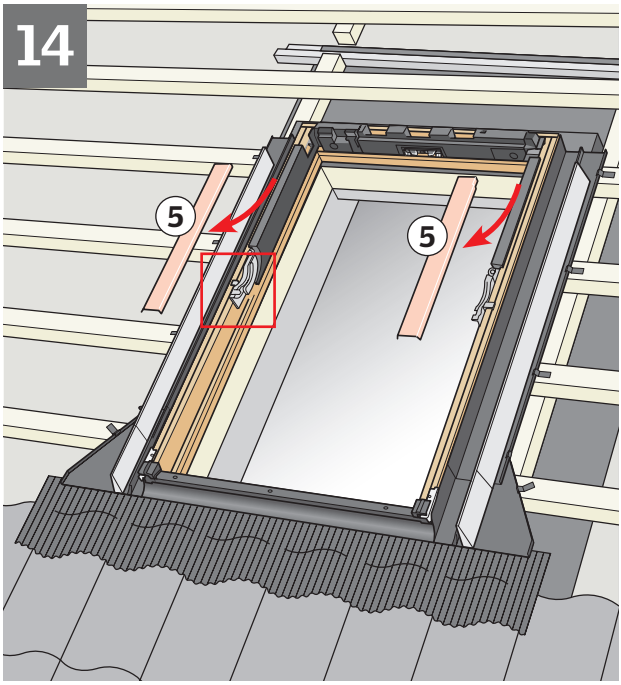
14
5
5

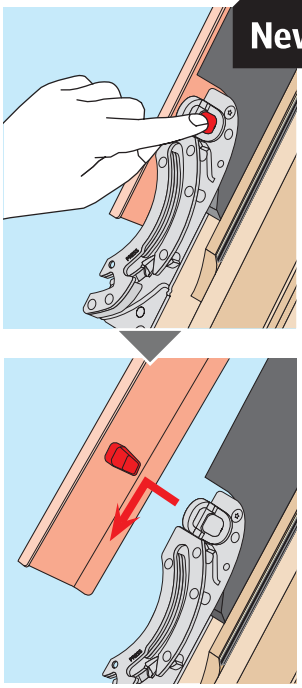
New

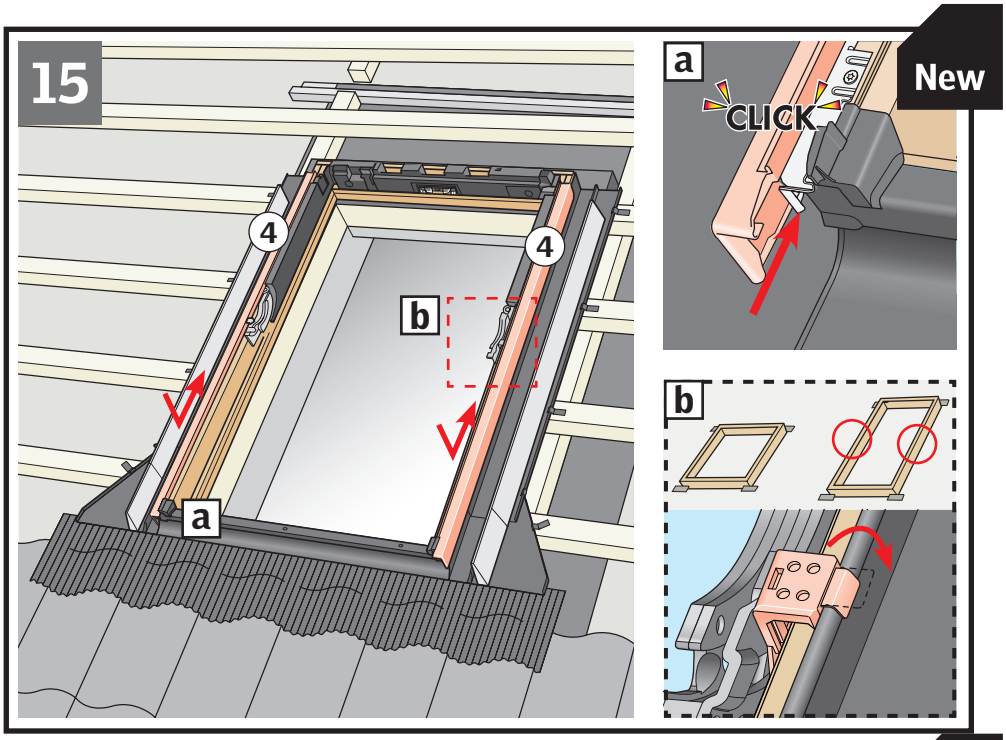
15
4
4
b
a
a
CLICK
New
b

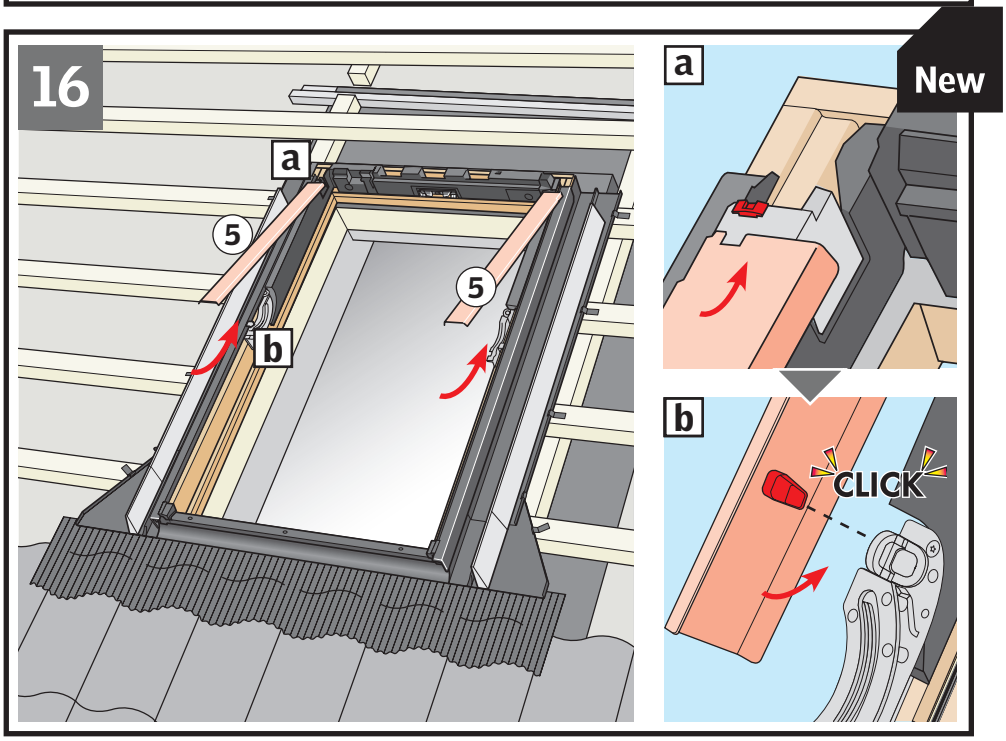
16
a
5
5
b
a
New
b
CLICK

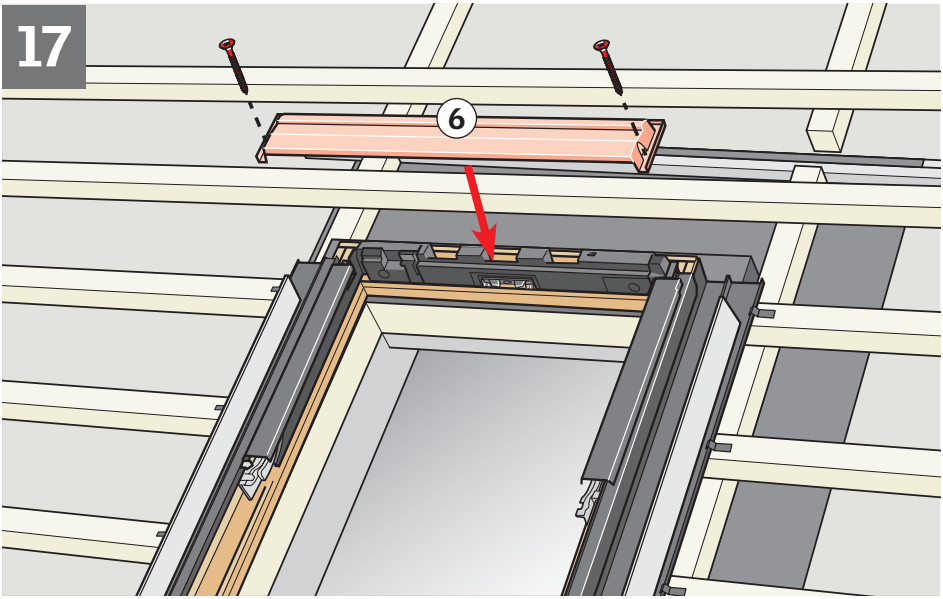
17
6

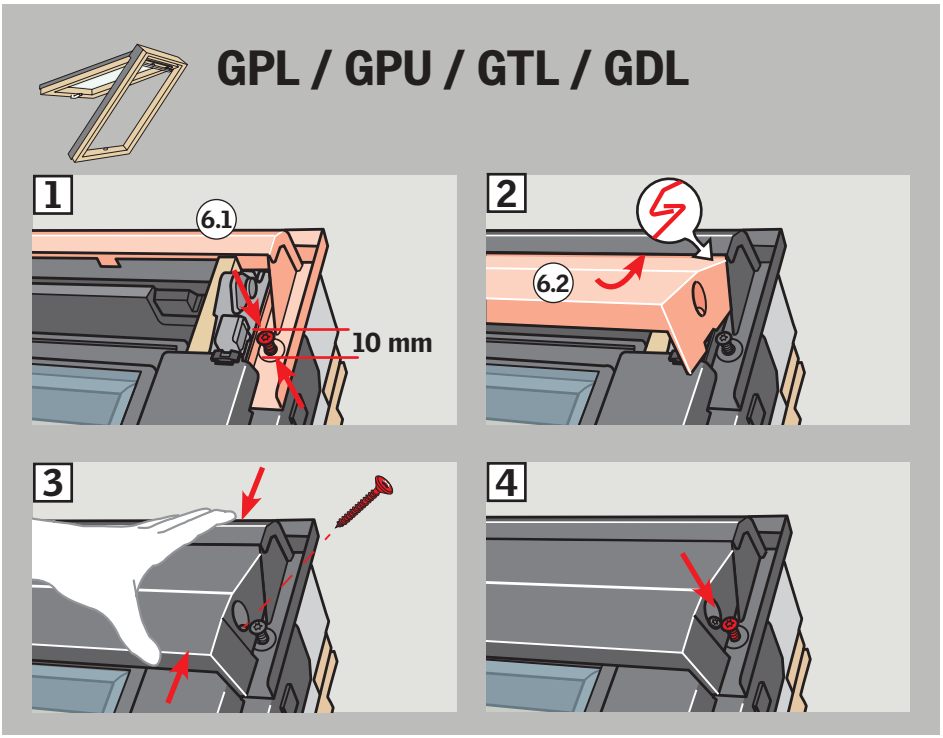
GPL / GPU / GTL / GDL
1
6.1
10 mm
2
6.2
3
4

18

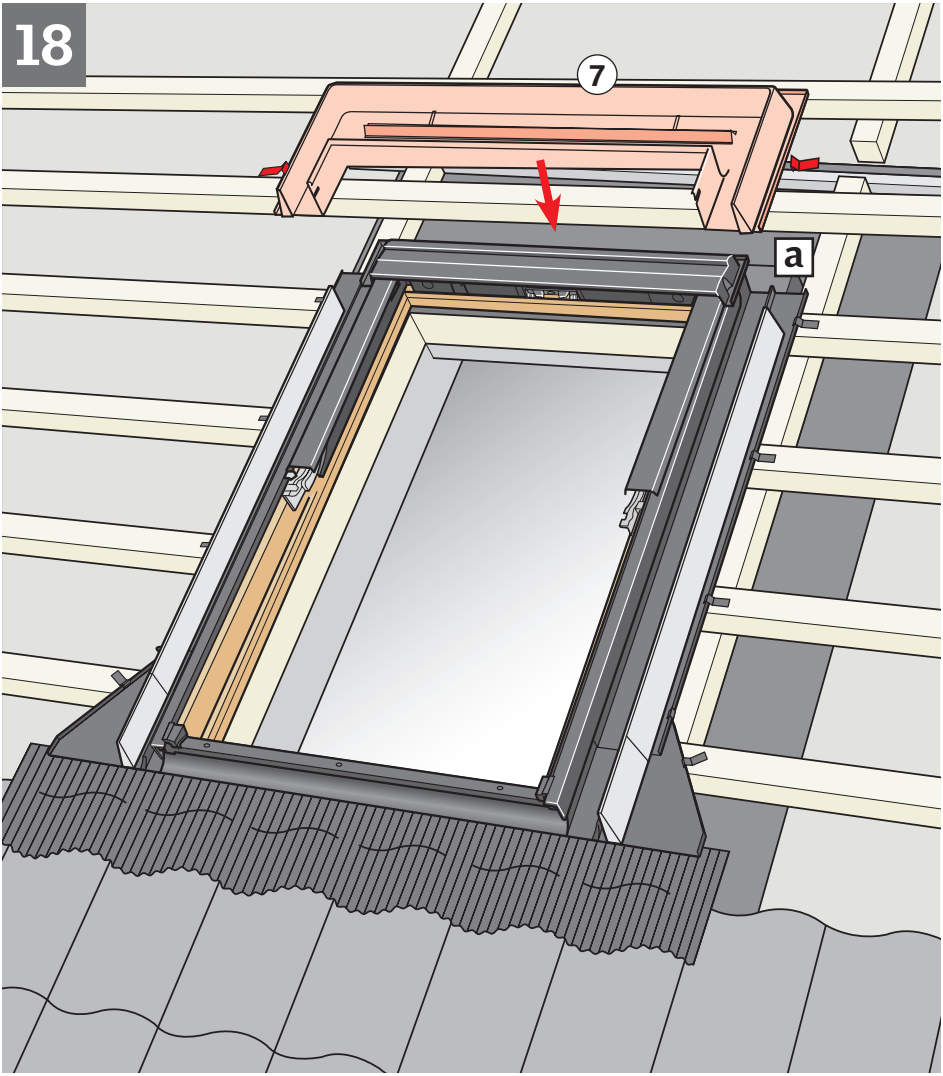

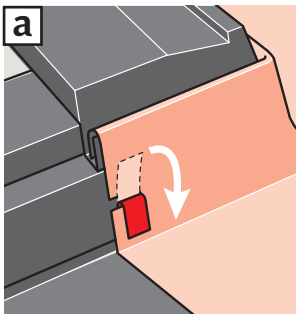

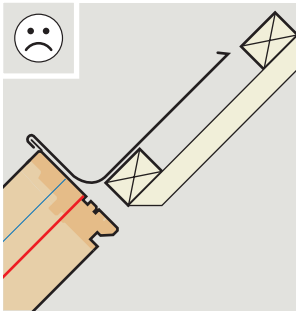

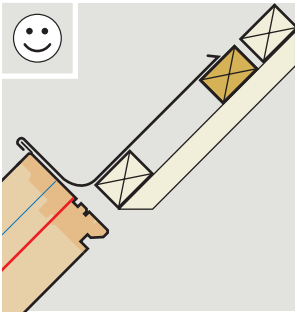

19

a

b

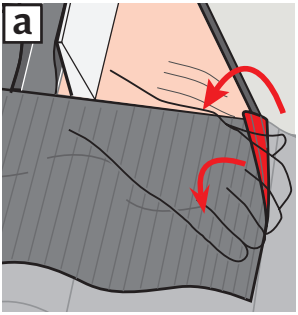

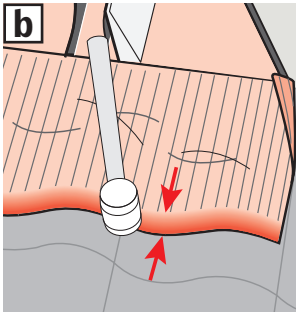

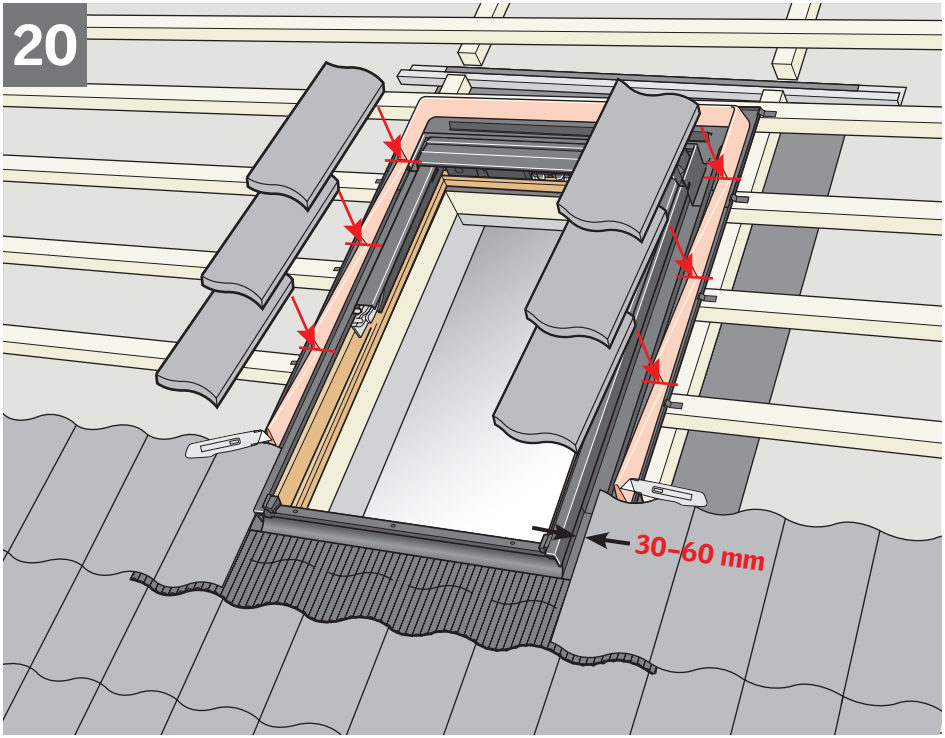
20
30–60 mm

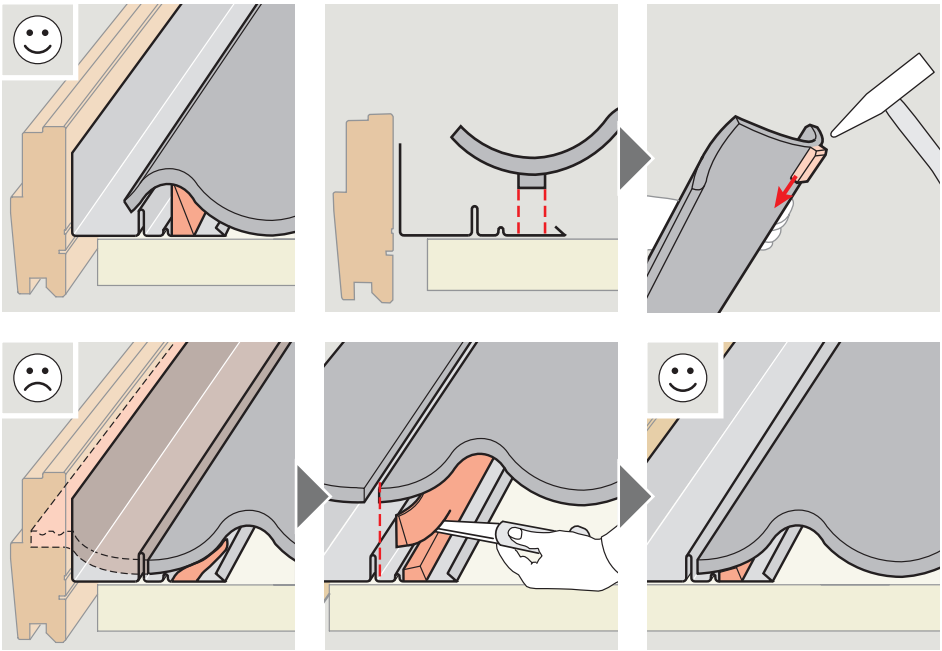

21

60–150 mm

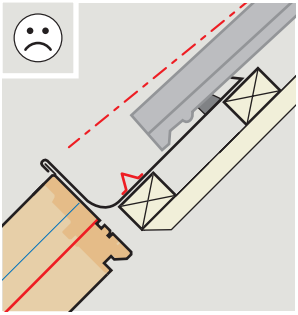

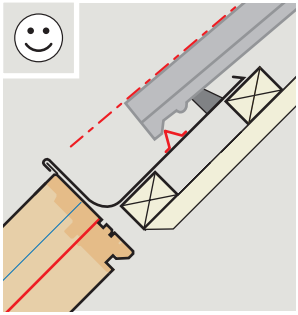

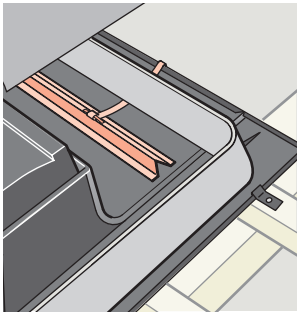

VELUX®

AR: VELUX Argentina S.A.
348 4 639944

AT: VELUX Österreich GmbH
02245/32 3 50

AU: VELUX Australia Pty. Ltd.
1300 859 856

BA: VELUX Bosna i Hercegovina d.o.o.
033/626 493, 626 494

BE: VELUX Belgium
(010) 42.09.09

BG: VELUX Bulgaria EOOD
02/955 99 30

BY: FE VELUX Roof Windows
(017) 217 7385

CA: VELUX Canada Inc.
1 800 88-VELUX (888-3589)

CH: VELUX Schweiz AG
0848 945 549

CL: VELUX Chile Limitada
2 953 6789

CN: VELUX (CHINA) CO. LTD.
0316-607 27 27

CZ: VELUX Česká republika, s.r.o.
531 015 511

DE: VELUX Deutschland GmbH
01806 / 33 33 99
Festnetz: 0,20 €/Anruf
Mobilfunk: max. 0,60 €/Anruf

DK: VELUX Danmark A/S
45 16 45 16

EE: VELUX Eesti OÜ
621 7790

ES: VELUX Spain, S.A.
91 509 71 00

FI: VELUX Suomi Oy
0207 290 800

FR: VELUX France
0821 02 15 15
0,119€ TTC/min

GB: VELUX Company Ltd.
01592 778 225

HR: VELUX Hrvatska d.o.o.
01/5555 444

HU: VELUX Magyarország Kft.
(06/1) 436-0601

IE: VELUX Company Ltd.
01 848 8775

IT: VELUX Italia s.p.a.
045/6173666

JP: VELUX-Japan Ltd.
0570-00-8145

LT: VELUX Lietuva, UAB
(85) 270 91 01

LV: VELUX Latvia SIA
67 27 77 33

NL: VELUX Nederland B.V.
030 - 6 629 629

NO: VELUX Norge AS
22 51 06 00

NZ: VELUX New Zealand Ltd.
0800 650 445

PL: VELUX Polska Sp. z o.o.
(022) 33 77 000 / 33 77 070

PT: VELUX Portugal, Lda
21 880 00 60

RO: VELUX România S.R.L.
0-8008-83589

RS: VELUX Srbija d.o.o.
011 20 57 500

RU: ZAO VELUX
(495) 737 75 20

SE: VELUX Svenska AB
042/20 83 80

SI: VELUX Slovenija d.o.o.
01 724 68 68

SK: VELUX Slovensko, s.r.o.
(02) 33 000 555

TR: VELUX Çatı Pencereleri
Ticaret Limited Şirketi
0 216 302 54 10

UA: VELUX Ukraina TOV
(044) 2916070

US: VELUX America Inc.
1-800-88-VELUX

www.velux.com

INSTALLATION INSTRUCTIONS FOR FLASHING EDW-S. ©2014 VELUX GROUP ®VELUX AND THE VELUX LOGO ARE REGISTERED TRADEMARKS USED UNDER LICENCE BY THE VELUX GROUP